ResearchGate

See discussions, stats, and author profiles for this publication at: https://www.researchgate.net/publication/252016376

Ultra low-power low-voltage active-RC filter with on-chip automatic tuning

Article · May 2011

DOI: 10.1109/ECTICON.2011.5947777

CITATIONS
5

READS
309

3 authors, including:

Amorn Jiraseree-amornkun
Silicon Craft Technology PLC

15 PUBLICATIONS **182** CITATIONS

SEE PROFILE

All content following this page was uploaded by Amorn Jiraseree-amornkun on 07 October 2014.

The user has requested enhancement of the downloaded file.

Ultra Low-Power Low-Voltage Active-RC Filter With On-Chip Automatic Tuning

Chairat Upathamkuekool, Amorn Jiraseree-amornkun, and Jirayuth Mahattanakul
Department of Electronic Engineering,
Mahanakorn University of Technology, Bangkok 10530 Thailand
Email:frongsyn@gmail.com, {amorn, jirayuth}@mut.ac.th

Abstract–An ultra low-power low-voltage active-RC filter design with on-chip automatic tuning system is presented. It is based on the compensation method for compact low-gain amplifier and can be operated at supply voltages down to 0.5 V. Charge pump phase-locked loop technique has been adopted for automatic tuning system. A fifth-order Chebyshev low-pass filters with cut-off frequency tunable from 2 MHz to 10 MHz was designed using a 0.18-μm CMOS process with standard threshold voltage. The output signal-to-in-band integrated noise ratio (SNR) is around 42 dB and the spurious-free dynamic range (SFDR) about –42 dBc is also obtained. The filter consumes only 60.9μW with 10 MHz bandwidth.

I. Introduction

Down scaling in size and power is an important trend in modern portable system. For example, hearing aids and mobile communications require ultra low-voltage circuits and minimum power consume for longer battery lifetime [1].

The continuous-time active-RC filters are suitable for low-voltage applications due to their superior linearity properties, in which the amplifier with sufficient gain is a variable [2]. Typically the buffered two-stage op amp and cascode op amp are used in normal conditions. However under ultra low-voltage low-power constraint, unbuffered single-stage op amp is preferable in order to minimize die area and power consumption. A simple compensation technique for unbuffered low-gain amplifiers has been published recently [3]. Nevertheless, there is still a critical issue that the integrator passive components may cause errors in circuit operation due to fabrication deviation, temperature drift and aging etc. A maximum variation of ±50% in the 3-dB cut-off frequency is typical in extreme condition. These lead to the demand for the accurate on-chip tuning circuit.

In section II, the compensation method of the active-RC integrator employing unbuffered low-gain op amp is reviewed. Then the compensated ultra low-power low-voltage integrator is described in section III. Section IV discusses about the automatic tuning circuit and the simulation results of a fifth-order low-pass filter are given in section V. In the last section, some conclusions are addressed.

II. Compensation Method

This section discusses the compensation method for the active-RC integrator employing unbuffered low-gain amplifier [3]. Fig. 1 (a) and (b) show a fully differential active-RC integrator circuit and its differential-mode half circuit where G_{md} and G_{od} are differential-mode gain and output conductance, respectively. From Fig. 1(b), the voltage transfer function can be derived as

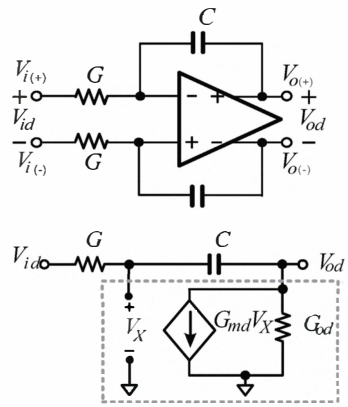

(b)

Fig. 1. Integrator models. (a) Fully-differential active-RC integrator. (b) Differential-mode half circuit of (a).

$$\frac{V_{od}}{V_{id}} = \frac{-G(sC - G_{md})}{sC(G + G_{od} + G_{md}) + GG_{od}}. \quad (1)$$

Under the condition that G_{md} is much larger than G and G_{od}, (1) can be rearranged to

$$\frac{V_{od}}{V_{id}} = \frac{G}{\dfrac{sC \cdot G_{md}}{(G_{md} - sC)} + \dfrac{GG_{od}}{G_{md}}}. \quad (2)$$

By defining

$$A_o = G_{md} / G_{od}$$

as a gain of the op amp, (2) can be redrawn into an equivalent circuit in Fig. 2. It can be observed that the presence of the lossy conductance G/A_0 would limit the DC gain of the integrator, while the negative conductance $-G_{md}$ would affect the high frequency response due to the additional transmission

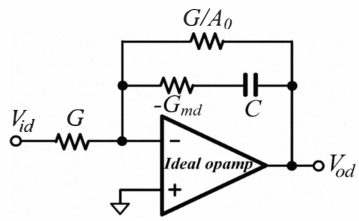

Fig. 2. Integrator circuit with inserted parasitic G/A_0 and $-G_{md}$.

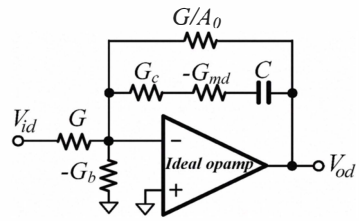

Fig. 3. Circuit that Compensation $-G_b$ and G_c.

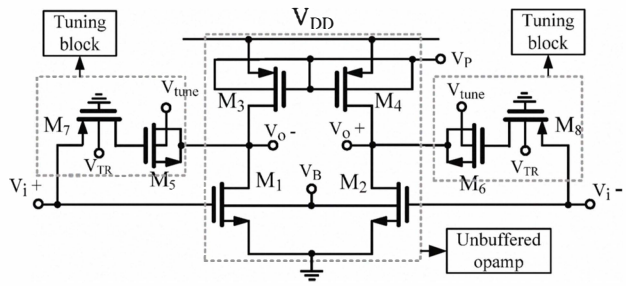

Fig. 4. Compensated fully differential unbuffered single-stage op amp.

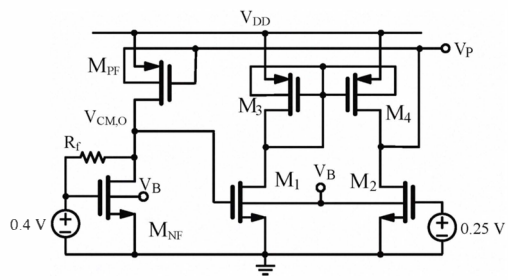

Fig. 5. Common-mode level control circuit (V_P).

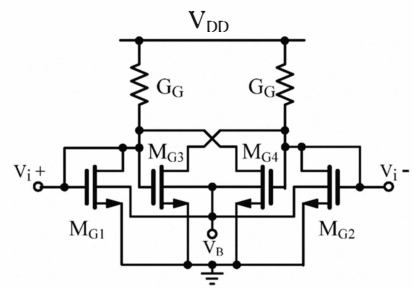

Fig. 6. Differential-mode negative conductance cell (DNC).

zero. These two parasitic elements are therefore needed to be compensated.

In order to nullify the effects of the above parasitic, two extra conductances $-G_b$ and G_c are inserted to the circuit as illustrated in Fig. 3. Obviously, G_c is added to counteract the parasitic conductance $-G_b$. Also the addition of the conductance $-G_b$ provides current signal to compensate the gain loss due to G/A_0. It can be proved that by setting the compensating conductance $G_c = G_{md}$ and $G_b = G$, the circuit would become an ideal integrator.

III. Ultra Low-Voltage Low-Power Integrator

In order to meet the ultra low-power low-voltage restriction, a fully differential unbuffered single-stage op amp has been chosen as a low-gain amplifier. The op amp including frequency tuning block is shown in Fig. 4. This circuit is simple and can be operated at very low supply voltage. The NMOS transistors M_1-M_2 are input differential pair and the PMOS transistors M_3-M_4 are active loads. For a maximum output signal swing, the output common-mode level, $V_{CM,O}$ is typically set to $V_{DD}/2$ through the control voltage V_P, which is generated by a common-mode level control circuit in Fig. 5. Since the circuit is pseudo differential integrator, the common-mode of which must be control by an external circuit. Moreover as each integrator is driven by another similar stage, the input common-mode level, $V_{CM,I}$, is also $V_{DD}/2$. For input NMOS transistor to be turned on, their gate bias voltage should be set as high as possible, which is 0.4 V in our design. Such a common-mode gain and common-mode level can be maintained by a differential-mode negative conductance cell (DNC) in Fig. 6 that will be explained later. The bodies of M_1-M_2 are biased by a fixed voltage V_B, while that of M_3-M_4 are connected to their gates in order to reduce threshold voltage V_{TH}. Transistors M_{NF}-M_{PF} in Fig. 5 are matched to the NMOS and PMOS transistors of the op amp, respectively, for resembling the common-mode properties of the op amp. Input of M_{NF} is bias to 0.4 V similar to that of the input differential pair of the op amp, while the output is connected to the auxiliary amplifier in a feedback fashion for setting $V_{CM,O}$ to 0.25 V ($V_{DD}/2$). The resulted V_P will be used to control the output common-mode level for the rest of the integrators' op amp. It should be noted that the resistor R_f resembles the feedback resistors when the integrators are used in loop feedback forms.

The integrating capacitor C and the compensated conductor G_c in Fig. 3 are substituted by MOS varactor [4] M_5-M_6 and triode MOS M_7-M_8 in Fig. 4, respectively. Bodies of M_5-M_6 are connected to voltage V_{tune} from an automatic tuning circuit in section IV for providing the frequency response of the integrator tunable. From the previous analysis, the conductance of the triode MOS M_7-M_8 must be set close to the transconductance of the input differential pair M_1-M_2 in order to cancel the parasitic component. As their gate-source

terminals are connected together, these two values should be tracked vary well in theory. However, the MOS varactor also possesses a series conductance, so that M_7-M_8 are also needed to be tuned incorporating this conductance via a control voltage V_{TR}, which is a fraction of control voltage V_{tune}.

A differential-mode negative conductance (DNC) cell is shown in Fig. 6. It provides the negative conductance $-G_b$, which is chosen to be -2G for compensating both the input and feedback conductance of each individual integrator stage. The negative conductance can be approximated from

$$-G_b = G_G + \mu_n C_{ox}\left(\frac{W_{MG1} - W_{MG4}}{L}\right)(V_{GS} - V_{TH}). \quad (3)$$

Thus the channel width of M_{G3}-M_{G4} should be set larger than that of M_{G1}-M_{G2} to obtain the negative conductance as required. Moreover, the DNC cell also provides common-mode gain suppression for stabilizing the system and input common mode level biasing of 0.4 V by setting the ratio between G_G and conductance of M_{G1}-M_{G4} [3].

IV. Automatic Tuning

In order to reference the filter frequency response to an external clock signal accurately, the phase-locked loop technique is required. The automatic tuning frequency block diagram is shown in Fig. 7. This system consists of phase/frequency detector (PFD), charge pump and voltage control oscillator (VCO). The first block PFD detects differential phase and frequency between clock reference and output of VCO. Output of PFD would activate the charge pump circuit accordingly in which the charge pump signal would vary control voltage for VCO such that ω_{out} approach ω_{in}. When the frequency difference between ω_{out} and ω_{in} is close to zero, the loop system operates to lock [5].

VCO circuit is shown in Fig. 9. It was designed using tunable integrator with the compensation technique and the given resistors and capacitors are matched to the main filter. The op amp would be set phase lag to 60° per stage. The oscillator has a nominal frequency of oscillation given by and

$$f_o = \frac{\sqrt{3}}{2\pi R_a C_a} \quad (4)$$

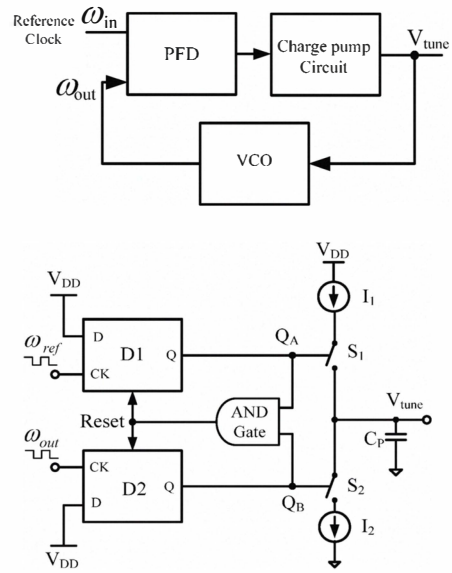

Fig. 8. PFD with charge pump.

it operate only when $R_a \geq 2R_b$. In Fig. 9, R_a = 510 kΩ, R_b = 166.5 kΩ, and C_a = 2.16 pF are chosen.

The charge-pump PFD is shown in Fig. 8. It consists of D flip-flops comparing the VCO signal with the reference clock. Then the output of D flip-flops Q_A and Q_B are used to controlled switches S1 and S2, respectively, to charge and discharge capacitor C_P. The resulting output voltage V_{tune} is used to bias VCO and control the frequency response of the filter.

V. Simulation Results

A fifth-order Chebyshev low-pass filter was designed with the proposed compensation method using a standard 0.18μm CMOS process from TSMC and operating at 0.5-V single supply. The design is derived from a prototype passive RLC filter using leapfrog topology for minimum sensitivity. The compensated filter design diagram is shown in Fig. 10. Its cut-off frequency was set to 10MHz with 0.5dB pass-band ripple.

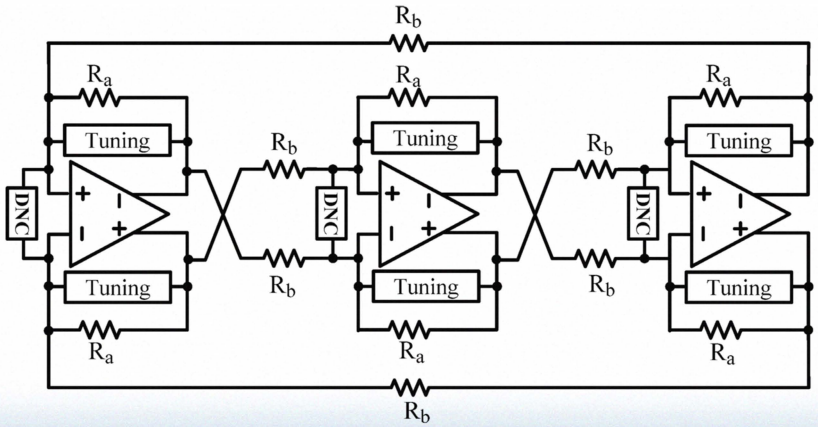

Fig. 9. Three-stage low-voltage controlled oscillator.

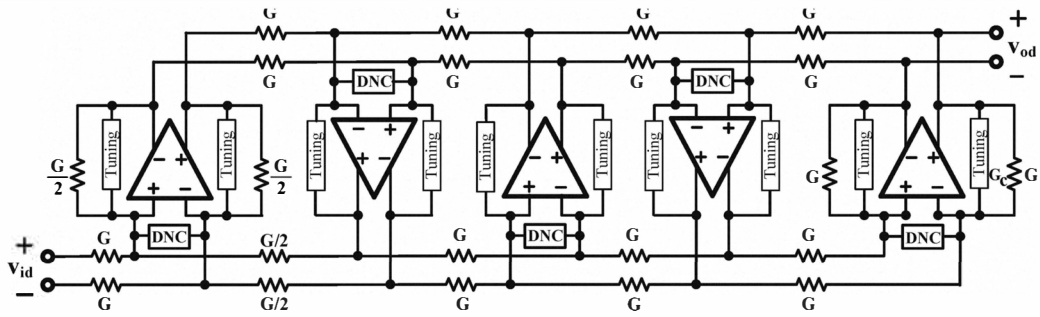

Fig. 10. Compensated fully differential fifth-order Chebyshev active-RC LPF.

The prototype filter components are G =1/(100 kΩ), C_1 = C_5 = 0.27 pF, C_2 = C_4 = 0.195 pF and C_3 = 0.4 pF. The devices parameters of the op amp and the size of MOS varactors corresponding to the prototype filter capacitors are listed in table 1. Its simulated frequency response for V_{tune} of 0 V, 0.3 V and 0.5 V, resulting in cut-off frequency of 2 MHz, 5 MHz and 10 MHz, respectively, are shown in Fig. 11. The pass-band ripple is within 0.5 dB as design specification. The output noise, integrated over 1 kHz to 10 MHz is about 2.25×10^{-6} V^2 or –56.5 dB. 1% total harmonic distortion (THD) for 10 kHz sinusoidal input signal was recognized at output fundamental tone amplitude of 183 mV_{rms} or –14.7 dB, so the output signal-to-in-band integrated noise ratio (SNR) of about 42 dB is achieved. In-band two-tone test result at 3 – 3.5 MHz and 0.5-V_{p-p} amplitude is shown in Fig. 12, and the third-order spurious free dynamic range (SFDR3) is about –42 dBc. The filter consumes only 60.9 μW while the tuning circuit takes about 640 μW at 0.5-V supply.

TABLE I
DEVICE PARAMETERS OF THE OPAMP

Device	Parameter	Device	Parameter
M_1,M_2	13μm/0.18μm	M_{C1}	28.8μm/20μm
M_3,M_4	30μm/0.18μm	M_{C2},M_{C4}	41.98μm/20μm
M_{G1},M_{G2}	5.66μm/0.18μm	M_{C3}	70.4μm/20μm
M_{G3},M_{G4}	0.72 μm/0.18μm	M_{C5}	38.4μm/20μm
M_7-M_8	105μm/0.18μm	M_{VCO}	720μm/20μm
R_G	10kΩ	V_B	0.15V

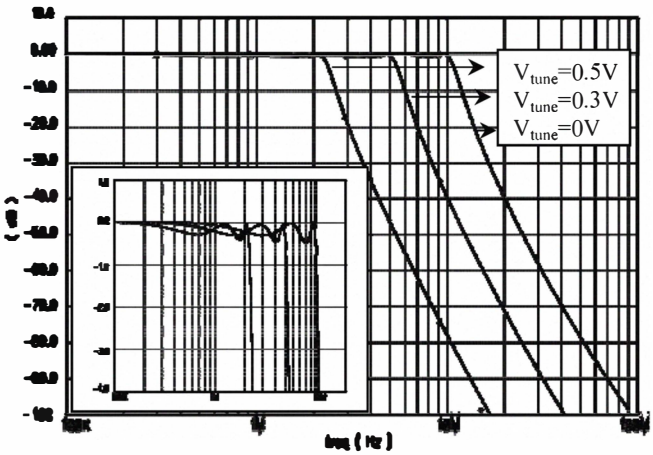

Fig. 11. Simulated tunable frequency response of the 10 MHz fifth-order LPF at V_{tune} of 0V, 0.3V and 0.5V.

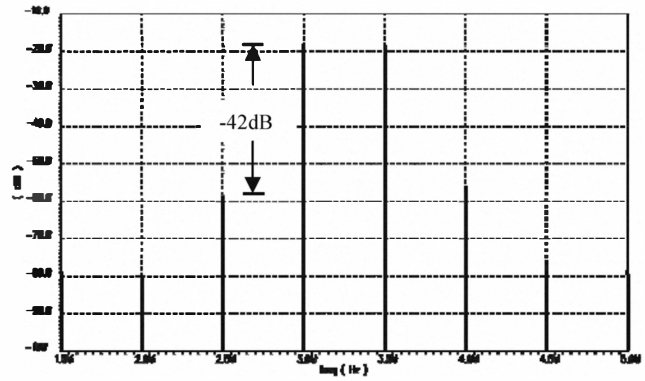

Fig.12. Simulated SFDR3

VI. CONCLUSION

This paper describes an approach for realizing ultra low-power low-voltage active-RC filters with on-chip automatic tuning system. The design is based on compensation technique for compact low-gain amplifiers, in which the bandwidth is made tunable by means of weak inversion MOS varactors. The frequency response would be referred to the external clock signal accurately with the phase locked-loop circuit. Simulation results of the designed fifth-order Chebyshev low-pass filter operated under 0.5-V supply show desired responses with cut-off frequency tunable from 2 MHz to 10 MHz. The SNR and SFDR are about 42 dB and –42 dBc, respectively. The filter consumes only 60.9μW that serves the needs of ultra low-power applications.

REFERENCE

[1] F. Bautista, S. O. Martinez, G. Dieck and O. Rossetto, "An ultra- low voltage high gain operational transconductance amplifier for biomedical applications" *Workshop on Design and Architectures for Signal and Image Processing (DASIP)*, France, 2007.
[2] Y. P. Tsividis, "Integrated Continuous-time filter design - An overview," *IEEE J. Solid-State Circuits*, vol. 29, no. 3, pp.166-176, March 1994.
[3] C. Upathamkuekool, A. Jiraseree-amornkun, and J. Mahattanakul, "A Compensation Technique for Compact Low-Voltage Low-Power Active-RC Filters" *Proceedings of the 2010 IEEE International Symposium on Circuits and Systems (ISCAS 2010)*, Paris, France, May 2010, pp. 3633–3636.
[4] S. Chatterjee, Y. Tsividis, and P. Kinget, "0.5-V Analog Circuit Techniques and Their Application in OTA and Filter Design," *IEEE J. Solid-State Circuits*, vol. 40, no. 12, pp. 2373-2387, Dec. 2005.
[5] B. Razavi, "Design of Analog CMOS Integrated Circuit" Los Angeles: University of California, 2001.

View publication stats